IMPORTANT NOTICE - READ CAREFULLY

Yokebox and Long Yokebox Installation Instructions

Compression Connectors - General Information

1. Use a tube or pipe cutter to assure a square end. Make sure pipe is round. On copper tubing, use a rounding tool, if necessary. Surface should be clean.
2. Service tubing should always be **snaked** in the ditch.
3. ***INSERT STIFFENERS MUST BE USED ON FLEXIBLE PLASTIC SERVICE TUBE OR PIPE.**
4. Stab tube or pipe through the nut and into the socket of the valve or fitting until it bottoms out (some fittings may not have a stop).
5. If the nut or socket appears too large or small, a check should be made to be sure you are using the correct fitting and pipe/tube.
6. **PRESSURE TEST FOR LEAKS BEFORE BACKFILLING.**
7. **USE ONLY ON COLD WATER SERVICES.**

Steel Pipe Size "-55" Compression Connectors

Tighten the "55" Compression nut onto the valve or fitting to the following minimum torques.

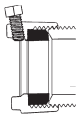

3/4" size..... 30 ft-lbs.
1" size..... 35 ft-lbs.
1 1/2" size..... 40 ft-lbs.
2" size..... 45 ft-lbs.

This compresses the gasket for watertight connections. Overtorquing nut by 10-20 ft-lbs. will not affect connections.

Lock the pipe onto the nut by tightening the cup-point set screw(s) as follows (NOTE UNIT CHANGE):

3/4" size ..... 3/4 - 1 turns (approx. 50 in-lbs.)
1" size..... 1 1/2 - 2 turns (approx. 180 in-lbs.)
1 1/2" size.. 1 1/2 - 1 3/4 turns (approx. 210 in-lbs.)
2" size..... 1 1/2 - 1 3/4 turns (approx. 210 in-lbs.)

Mac-Pak Compression Connectors (-22, -33, -44)

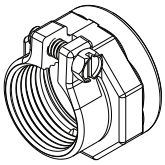

Tighten the Mac-Pak nut onto the valve or fitting to the following minimum torques. Overtorquing nut by 10-20 ft.-lbs. will not affect connections.

1/2" size..... 20 ft.-lbs.
3/4" size..... 25 ft.-lbs.
1" size..... 30 ft.-lbs.
1 1/4" size..... 35 ft.-lbs.
1 1/2" size..... 40 ft.-lbs.
2" size..... 45 ft.-lbs.

Lock the tube or pipe into the nut by securely tightening the split clamp side screw (use a box end or socket wrench, not a screwdriver). The torques to which the clamp side screw should be tightened are as follows (NOTE CHANGE IN UNITS).

1/2" size..... 70-80 in.-lbs.
3/4" size..... 80-90 in.-lbs.
1" size..... 90-100 in.-lbs.
1 1/4" size..... 120-140in.-lbs.
1 1/2" size..... 160-180 in.-lbs.
2" size..... 200-220 in.-lbs.

A.Y. McDonald Mac-Pak Coding System

All A.Y. McDonald Mac-Pak fittings are coded to identify which type of service material they are designed to fit. Lettering is on the hex of the Mac-Pak nut.

***INSERT STIFFENERS MUST BE USED ON FLEXIBLE PLASTIC SERVICE TUBE OR PIPE.**

CTS
- Copper tube (Type K or L)
- PE tube per ASTM D2737 SDR 9 ONLY
- PB tube per ASTM D2666 SDR 9 Class 250 ONLY

PVC
- PVC pipe per ASTM D1785
- Steel pipe
- Brass pipe

***PEP**
- PE pipe per ASTM D2239 SIDR 7 ONLY
- PB pipe per ASTM D2662 SIDR 7 Class 250 ONLY
  * was marked IPS until 2/02

CTS McQuik ("Q") Series and PEP McQuik ("-3Q") Series Compression Connectors

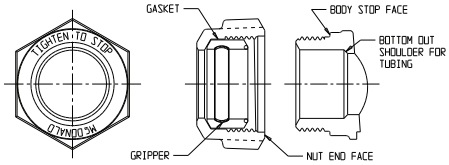

Tighten the CTS McQuik "Q" Series nut or the PEP McQuik "-3Q" nut to the stop. The end face of the nut is to contact the stop face of the body.

T - Series (CTS) Compression Connectors

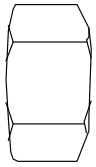

Tighten the compression nut onto the valve or fitting to the following minimum torques. Overtorquing nut by 5-10 ft.-lbs. will not affect connections.

T - Series

3/4" size..... 50 ft.-lbs.
1" size..... 55 ft.-lbs.
1 1/4" size..... 65 ft.-lbs.
1 1/2" size..... 100 ft.-lbs.
2" size..... 125 ft.-lbs.

*** INSERT STIFFENERS MUST BE USED ON FLEXIBLE PLASTIC SERVICE TUBE OR PIPE.**

Types of Pipe/Tubing for use with A.Y. McDonald Fittings (Outside Diameters listed)

NOMINAL SIZE	TYPE K or L COPPER TUBE	POLYETHYLENE ASTM D2737 SDR 9 TUBE SIZE *	POLYBUTYLENE ASTM D2666 SDR 9 TUBE SIZE CLASS 250 *	POLYETHYLENE ASTM D2239 SIDR 7 PIPE SIZE *	POLYBUTYLENE ASTM D2662 SIDR 7 CLASS 250 *
3/4"	.872 / .878	.871 / .879	.875 / .883	1.045 / 1.110 (1.089)	1.045 / 1.110 (1.089)
1"	1.121 / 1.129	1.120 / 1.130	1.125 / 1.135	1.329 / 1.399 (1.384)	1.329 / 1.399 (1.384)
1 1/4"	1.371 / 1.379	1.370 / 1.380	1.375 / 1.385	1.754 / 1.832 (1.804)	1.754 / 1.832 (1.804)
1 1/2"	1.621 / 1.630	1.619 / 1.631	1.625 / 1.637	2.050 / 2.141 (2.109)	2.050 / 2.141 (2.109)
2"	2.120 / 2.130	2.119 / 2.131	2.125 / 2.137	2.637 / 2.742 (2.709)	2.637 / 2.742 (2.709)

( ) · Maximum pipe O.D. that will work with A.Y. McDonald fittings.

WARNING: It is unlawful in **CALIFORNIA & VERMONT (effective 1/1/2010); MARYLAND (effective 1/1/2012); LOUISIANA (effective 1/1/2013) and the UNITED STATES OF AMERICA (effective 1/4/2014)** to use any product in the installation or repair of any public water system or any plumbing in a facility or system that provides water for human consumption if the wetted surface area of the product has a weighted average lead content greater than 0.25%. This prohibition does not extend to service saddles used in California, Louisiana or under USA Public Law 111-380.

IMPORTANT NOTICE - READ CAREFULLY

Yokebox and Long Yokebox Installation Instructions

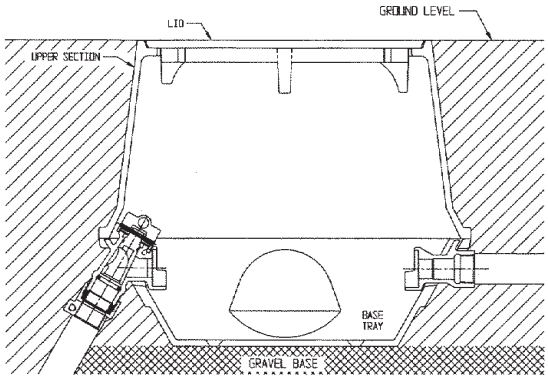

1. Yokebox and long yokeboxes should be installed with the top of the box at ground level.
2. Use proper box depth for freezing conditions.
3. Install on a gravel base for proper drainage.

Operating Ball Valves with Turning Restraints (Checks)

1. Ball valves generally require low operating torques.
2. If valve turns hard, check turning direction before using excess force. Excess force can damage or destroy the turning restraints (checks) in the ball valve cap and body assembly.
3. If the valve cap or stop box handle is perpendicular to the water line, the valve is closed and should be turned counter-clockwise to open. If the cap has an indented line, use the line to determine if the valve is open or closed.
4. If the valve cap or stop box handle is in line with the water line, the valve is open and should be turned clockwise to close. If the cap has an indented line, use the line to determine if the valve is open or closed.

Inline Dual Check Backflow Preventers/Device Used With Yokebox and Long Yokebox

ASSE 1024 approved, CSA B64.6 approved (See device markings for specific approvals)

Model Number Explanation

SPACE 1, 2, & 3
Basic dual check valve model number:
711 = Inline valve

SPACE 4
A dash (-)

SPACE 5
Dual check valve size:
3 = 3/4"

SPACE 6
Inlet connection type:
N - Meter female thread union
W - Yoke box mounted with counterbore union

SPACE 7
Outlet connection type:
A - Male meter thread integral
E - Female iron pipe integral
T - CTS T - Series compression integral
V - CTS McQuik compression integral
2 - CTS (-22) Mac-Pak compression integral

SPACE 8
Blank

SPACE 9 & 10
The sizes for inlet (5) and outlet (6) types of connections:
2 = 5/8" 4 = 1"
3 = 3/4" 5 = 1 1/4"

Thread size of meter threads

METER SIZE	THREAD SIZE	MODEL NO. DESIGNATION
5/8	3/4"	3
5/8x3/4	1"	4
3/4	1"	4
1	1 1/4"	5

Not all sizes or combinations available - contact factory.

COMPONENTS & REPAIR PARTS

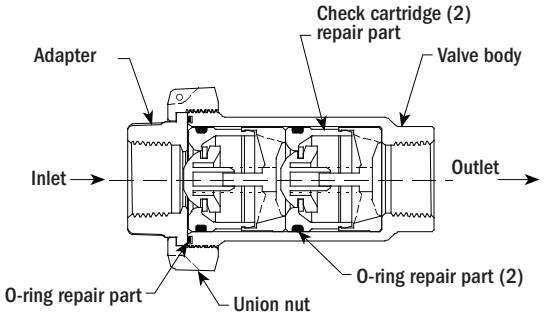

1. Use only for residential and mobile home supply service or individual outlets.
2. The device can be installed in either a horizontal or vertical position.
3. The device shall be installed in an accessible location to facilitate the removal for servicing and testing.
4. Service lines should be thoroughly flushed before installing the device. Excessive pipe sealant or Teflon tape may foul checks. A suitable strainer should be installed upstream of the device.
5. Insure that device is installed in proper flow direction. Refer to flow direction arrow on device tag.
6. Do not over-tighten O-ring union nut seal or across body cylinder to avoid distortion.
7. Any sweat fittings must be completed before installing device.
8. A pressure relief valve or expansion tank is recommended downstream of device if thermal expansion conditions are possible.
9. Use only on cold water services. Protect from freezing.
10. Refer to pressure and temperature ratings on device tag.

CAUTIONS

A.Y. McDonald waterworks products are designed for reliable service. Like all brass products, however, they can be damaged by improper handling and use.

1. Protect threads. Avoid loose fitting wrenches. Do not drop or impact.
2. Use extra care with high water pressures (over 100 PSIG) and pipe or tubing over 1". Consult factory if desired.
3. Inspect and test all joints, valves and fittings before backfilling.
4. Backfill carefully so as to avoid damage to the service line and connections. Looping of the service lines is recommended to minimize strain.
5. DO NOT use Vaseline®, plumber's grease, or any other petroleum based product on seals or o-rings.

Damage caused by improper use and/or handling will void our warranty.

Field Inspection & Test Procedure

A. DIS-ASSEMBLY
1. Loosen the union connection to access the check cartridges.
2. Remove the two check cartridges using care not to damage device components.
3. Visually inspect seals, sealing surfaces, etc. for debris or damage.

B. TESTING
1. Check cartridge O-ring should be lightly lubricated with a NSF approved silicone lubricant.
2. Insert check cartridge with O-ring into A.Y. McDONALD test kit as shown in drawing. Cartridge should be pushed against shoulder.
3. Add water to test kit level to upper red line - 42 inches (1.5 PSIG).
4. Observe water level for up to 5 minutes. Water level should not fall below lower red line - 28 inches (1.0 PSIG).
5. If water column falls below 28 inches the check cartridge should be cleaned and re-tested or replaced.
6. Repeat steps B1 - B4 for second check cartridge.

C. RE-ASSEMBLY
1. Clean and inspect device components.
2. Check cartridge O-rings should be lightly lubricated with a NSF approved silicone lubricant.
3. Insert check cartridges into body correctly corresponding to flow direction on device tag.
4. Re-assemble device into line. Do not over-tighten.

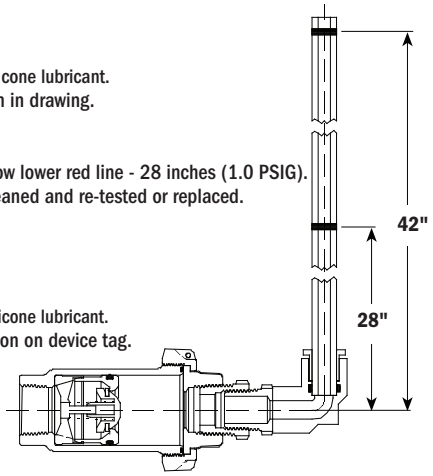

A.Y. McDonald Mfg. Co.
Contact Factory for Test Kit

IMPORTANT NOTICE - READ CAREFULLY

Handy-Loc ("H" & -3H") Series

Compression Connectors - General Information

The simple steps listed below will make your job easier and assure fast, safe, and watertight connections:

1. Service tubing should always be **snaked** in the ditch.
2. Use a tube cutter to assure a square end. Make sure tube is round. Surface should be clean and free of nicks.
3. Use chamfer tool to bevel lead edge of tubing, **do NOT lubricate tubing or use an insert stiffener** (chamfer tool available through A.Y. McDonald Mfg see chart below).
4. Verify grip ring is oriented as shown in diagram to ensure proper tube installation. The thick end of the grip ring should be facing the o-ring. The nut is factory assembled to the stop face, do Not disassemble or loosen nut.
5. Mark tube from lead edge to ensure proper insertion depth. (See chart below for required depth), stab tube through nut, grip ring, and o-ring until end of nut is even with mark. (Some fittings may not have a stop). Pull on tube to lock in place.
6. **PRESSURE TEST FOR LEAKS BEFORE BACKFILLING.**
7. **USE ONLY ON COLD WATER SERVICES.**
8. A.Y. McDonald is not responsible for damage resulting from improper installation of the Handy-Loc Nut Assembly.

For use on PE tube only. Do Not use on copper tube.

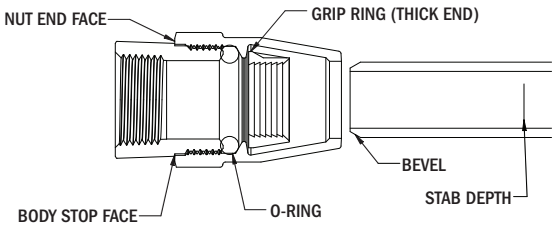

The A.Y. McDonald Series compression system is a simple convenient method of connection for tube size service materials.

(See table below for approved tubing specs.)

Types of tubing for use with A.Y. McDonald Fittings

NOMINAL SIZE	POLYETHYLENE ASTM D2737 SDR 9 TUBE SIZE O.D.	POLYETHYLENE ASTM D2239 SIDR 7 TUBE SIZE O.D.	A.Y. McDonald Chamfer Tools	Tubing Stab Depth
3/4" (H)	.871 / .879	NA	4772 3/4"	2 1/8"
1" (H)	1.120 / 1.130	NA	4772 1"	2 3/16"
3/4"(-3H)	NA	1.045 / 1.110 (1.089)	4773 3/4"	2 3/16"
1"(-3H)	NA	1.329 / 1.399 (1.384)	4773 1"	2 7/8"

() · Maximum pipe O.D. that will work with A.Y. McDonald fittings.

Installation Instructions for McGrip ("G" & "-3G") Series Compression Connectors

The simple steps listed below will make your job easier and assure fast, safe and watertight connections:

1. Service tubing should always be **snaked** in the ditch.
2. Use a tube or pipe cutter to assure a square end. Make sure pipe is round. On copper tubing, use a rounding tool, if necessary. Surface should be clean and free of nicks.
3. ✻ Insert stiffeners **must** be used with plastic tubing.
4. Stab tube through the nut and into the socket of the valve or fitting until it bottoms out (some fittings may not have a stop).
5. Tighten the McGrip "G" & "-3G" Series nut to the stop. The end face of the nut is to contact the stop face of the body.
6. **PRESSURE TEST FOR LEAKS BEFORE BACKFILLING.**
7. **USE ONLY ON COLD WATER SERVICES.**

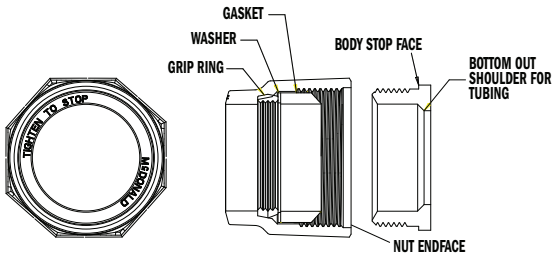

The A.Y. McDonald McGrip "G" & "-3G" Series compression system is a simple convenient method of connection for tube size service materials

(See table below for approved tubing specs.)

"-3G" Series Fittings Types of Pipe/Tubing for use with A.Y. McDonald Fittings(Outside Diameters listed)

NOMINAL SIZE	POLYETHYLENE ASTM D2239 SDR7 PIPE SIZE ✻
3/4"	1.045 / 1.110 (1.089)
1"	1.329 / 1.399 (1.384)

() · Maximum pipe O.D. that will work with A.Y. McDonald fittings.

"G" Series Fittings Types of Pipe/Tubing for use with A.Y. McDonald Fittings
(Outside Diameters listed)

NOMINAL SIZE	3/4"	1"	1 1/4"	1 1/2"	2"
TYPE K or L COPPER TUBE	.872 / .878	1.121 / 1.129	1.371 / 1.379	1.621 / 1.630	2.120 / 2.130
POLYETHYLENE ✻ ASTM D2737 SDR 9 TUBE SIZE	.871 / .879	1.120 / 1.130	1.370 / 1.380	1.619 / 1.631	2.119 / 2.131
POLYBUTYLENE ASTM D2666 SDR 9 TUBE SIZE CLASS 250 ✻	.875 / .883	1.125 / 1.135	1.375 / 1.385	1.625 / 1.637	2.125 / 2.137