Installation Instructions

Inline Dual Check Backflow Preventers/Device

Meets requirements of ASSE 1024

711X and 7311X Series - Model Number Explanation

SPACE 1, 2, & 3
Basic dual check valve model number:
711 = Inline dual check valve
Note: 7311 = Inline dual check valve - Integral meter swivel inlet with special lay length

SPACE 4
X - Signifies reduced envelope dual check valve

SPACE 5
Dual check valve size:
3 = 3/4"

SPACE 6
Inlet connection type:
F - Female iron pipe union
J - Meter swivel integral
M - Male iron pipe union

SPACE 7
Outlet connection type:
E - Female iron pipe integral
F - Female iron pipe union*
M - Male iron pipe union*
* Available only with meter swivel integral inlet

SPACE 8
Blank

SPACE 9-10
The sizes for inlet (5) and outlet (6) types of connections:
3 = 3/4"
4 = 1"
Thread size of meter threads

METER SIZE	THREAD SIZE	MODEL NO. DESIGNATION
5/8 x 3/4	1"	4
3/4	1"	4

COMPONENTS AND REPAIR PARTS

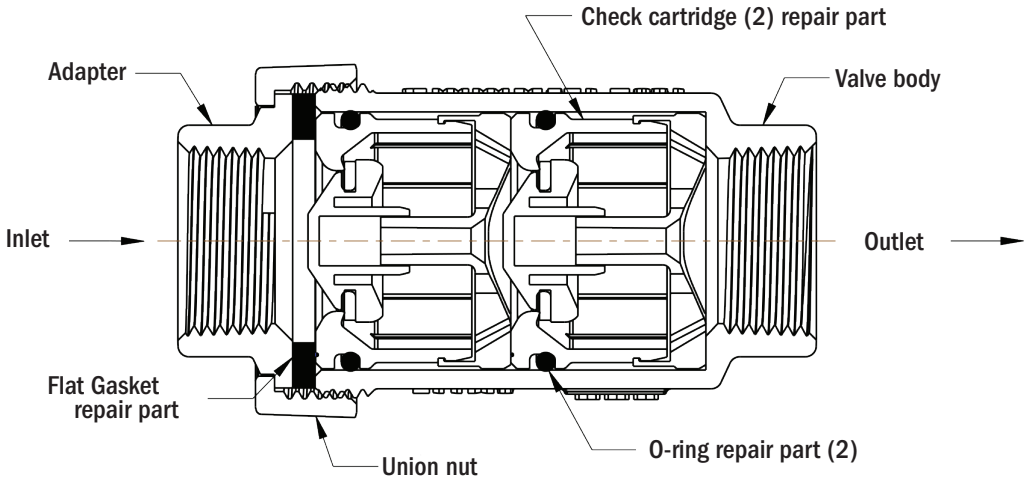

Contact factory for Repair Parts.

HOW TO ORDER

Not all sizes or combinations available - contact factory.

UNIT REQUIRED (Example):
- Inline style valve
- Valve size 3/4"
- Inlet - Meter swivel integral (3/4 meter)
- Outlet - FNPT union 3/4"

Order Model 711X3JF 43

SPACE 1, 2, & 3	SPACE 4	SPACE 5	SPACE 6	SPACE 7	SPACE 8	SPACE 9	SPACE 10
711	X	3	J	F		4	3

(Installation and test procedures on opposite side)

Installation Instructions

Inline Dual Check Backflow Preventers/Device

1. Use only for residential and mobile home supply service or individual outlets.
2. The device can be installed in either a horizontal or vertical position.
3. The device shall be installed in an accessible location to facilitate the removal for servicing and testing.
4. Service lines should be thoroughly flushed before installing the device. Excessive pipe sealant or Teflon tape may foul checks. A suitable strainer should be installed upstream of the device.
5. DO NOT use Vaseline®, plumber's grease, or any other petroleum based product on seals or O-rings.
6. Insure that device is installed in proper flow direction. Refer to flow direction arrow on device tag.
7. Do not over-tighten O-ring union nut seal or across body cylinder to avoid distortion.
8. Any sweat fittings must be completed before installing device.
9. A pressure relief valve or expansion tank is recommended downstream of device if thermal expansion conditions are possible.
10. Use only on cold water services. Protect from freezing.
11. Refer to pressure and temperature ratings on device tag.

FIELD INSPECTION AND TEST PROCEDURE

A. DIS-ASSEMBLY

1. Remove the device body from the line (union nut and adapter can remain in the line).
2. Remove the two check cartridges using care not to damage device components.
3. Visually inspect seals, sealing surfaces, etc. for debris or damage.

B. TESTING

1. Check cartridge O-ring should be lightly lubricated with a NSF approved silicone lubricant.
2. Insert check cartridge with O-ring into A.Y. McDONALD test kit as shown in drawing. Cartridge should be pushed against shoulder.
3. Add water to test kit level to upper red line - 42 inches (1.5 psig).
4. Observe water level for up to 5 minutes until water level stabilizes. Water level should not fall below lower red line - 28 inches (1.0 psig).
5. If water column falls below 28 inches the check cartridge should be cleaned and re-tested or replaced.
6. Repeat steps B1 - B4 for second check cartridge.

C. RE-ASSEMBLY

1. Clean and inspect device components.
2. Check cartridge O-rings should be lightly lubricated with a NSF approved silicone lubricant.
3. Insert check cartridges into body correctly corresponding to flow direction on device tag.
4. Re-assemble device into line. Do not over-tighten.

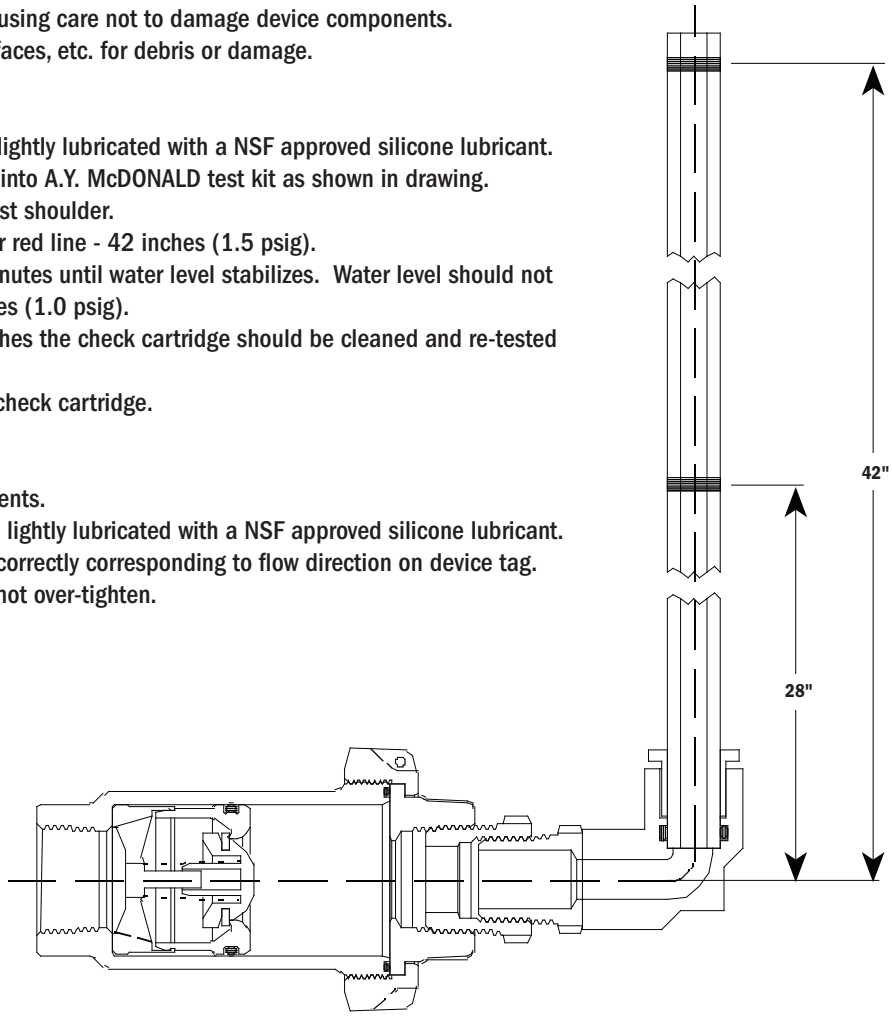

Contact factory for test kit.

WARNING: It is unlawful in **CALIFORNIA & VERMONT (effective 1/1/2010); MARYLAND (effective 1/1/2012); LOUISIANA (effective 1/1/2013) and the UNITED STATES OF AMERICA (effective 1/4/2014)** to use any product in the installation or repair of any public water system or any plumbing in a facility or system that provides water for human consumption if the wetted surface area of the product has a weighted average lead content greater than 0.25%. This prohibition does not extend to service saddles used in California, Louisiana or under USA Public Law 111-380.