DuraMAC™ Vertical Multi-Stage Centrifugal Pumps

WATER PRESSURE BOOSTER SYSTEM

ATTENTION!
Important information for installers of this equipment!

This equipment is intended for installation by technically qualified personnel. Failure to install it in compliance with national and local electrical codes and with motor suppliers recommendations, may result in electrical shock or fire hazard, unsatisfactory performance, and equipment failure.

WARNING!

Serious or fatal electrical shock may result from failure to connect the motor, control enclosures, metal plumbing, and all other metal near the motor or cable, to the power supply ground terminal using wire no smaller than motor cable wires. To reduce risk of electrical shock, disconnect power before working on or around the water system.

WARNING: It is unlawful in **CALIFORNIA & VERMONT (effective 1/1/2010); MARYLAND (effective 1/1/2012); LOUISIANA (effective 1/1/2013) and the UNITED STATES OF AMERICA (effective 1/4/2014)** to use any product in the installation or repair of any public water system or any plumbing in a facility or system that provides water for human consumption if the wetted surface area of the product has a weighted average lead content greater than 0.25%. This prohibition does not extend to service saddles used in California, Louisiana or under USA Public Law 111-380.

TABLE OF CONTENTS

SECTION	1	NAMEPLATE	2
SECTION	2	HANDLING	2
SECTION	3	APPLICATIONS	2
SECTION	4	TECHNICAL DATA	3
SECTION	5	INSTALLATION	4
SECTION	6	ELECTRICAL CONNECTION	6
SECTION	7	START UP	6
SECTION	8	MAINTENANCE	6-7
SECTION	9	TROUBLESHOOTING	8

Before installation, read the following instructions carefully. Each DuraMAC™ pump is individually factory tested to insure proper performance. Closely following these instructions will eliminate potential operating problems, assuring years of trouble-free service.

1. NAMEPLATE

1.1 Nameplate

1. Pump Type
2. Pump Model
3. Frequency
4. Rated Power
5. Speed
6. Maximum Head
7. Capacity
8. Head Range
9. Maximum Operating Pressure
10. Rotating Direction
11. Serial Number

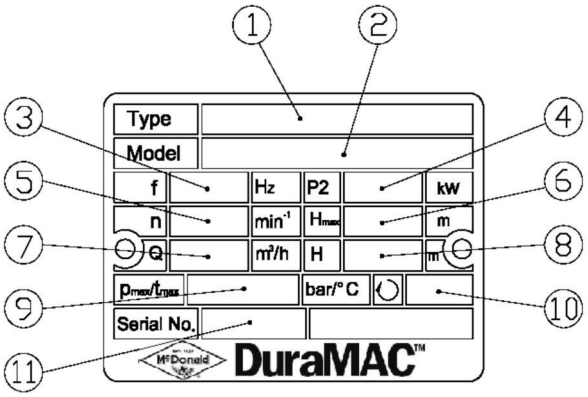

2. HANDLING

Read these instructions carefully before beginning installation. The pumps covered in this manual are vertical multi-stage non-self priming design coupled with standard NEMA electric motor. Lift and handle with care.

3. APPLICATIONS

Theses pumps are designed for a wide range of applications; pressure boosting, water supply, cooling, cleaning.

3.1 Pumped liquids

Acceptable liquids must be clean, viscous and non-explosive liquids that do not contain abrasive matter.

⚠ Do not use pumps with abrasive, solid containing, explosive or corrosive liquids.

⚠ Stop the pump if cavitation occurs.

A pump that is cavitating sounds like it is filled with gravel. Cavitation will cause pump damage and is not covered under the warranty.

4. TECHNICAL DATA

4.1 Temperatures

Ambient temperature: +32° F - +104°F

If ambient temperatures are above +104 degrees F, or if the pump is located at elevations more than 3,000 feet above sea level, the motor's output must be decreased to compensate for less effective cooling, and may have to be replaced with a larger motor.

Liquid temperature: +32°F - +140°F

4.2 Maximum operating pressure

- 230 psig

4.4 Minimum flow rate

To prevent overheating of the internal pump components, the pump should not be used at flows below the minimum flow rate, when running above 50 Hz.

Model	Min Flow
17000V80	4 GPM
17000V120	6 GPM
17000V150	9 GPM

Do not run the pump against a closed discharge valve.

4.6 Electrical data - See the motor nameplate.

Make sure that the supply voltages, phase and frequencies correspond to the motor specifications.

4.7 Number of starts per hour

Motors up to and including 10 HP, Maximum 6 starts per hour (without soft starters or frequency drives).

5. INSTALLATION

Always refer to the local or national regulations and codes when installing these pumps.

5.1 Location

The pump should be installed in a dry, accessible area protected from freezing temperatures. Proper ventilation must be provided for proper cooling of the electrical equipment.

Follow local plumbing codes. In some cases a dual check valve, reduced pressure zone device, or other equipment may be required.

Do not spray water on or near the electric motor or control.

Pump only water with this pump. Do not pump flammable liquids or chemicals. Do not use the pump near gas pilot lights or where chemical or gas fumes are present.

Use of an electric pump with liquids other than water or in an atmosphere containing chemical or gas fumes may ignite those liquids or gases and cause injury or death due to an explosion and/or fire.

5.2 Mounting

Mount the pump firmly to the floor in a dry accessible location with good ventilation for cooling. The pump and control must be protected from freezing temperatures.

5.3 Piping

1. Install a shut off valve and a union before and after the pump as shown. This will enable you to easily test or disconnect the system if required.

2. Install a pressure tank. A pressure tank is required for this product to work properly.
   The air pressure in the tank must be set 2-5 psi less than the start pressure of the pump.

3. Install a bypass line around the pump with a valve. Make sure this valve is closed for normal operation.

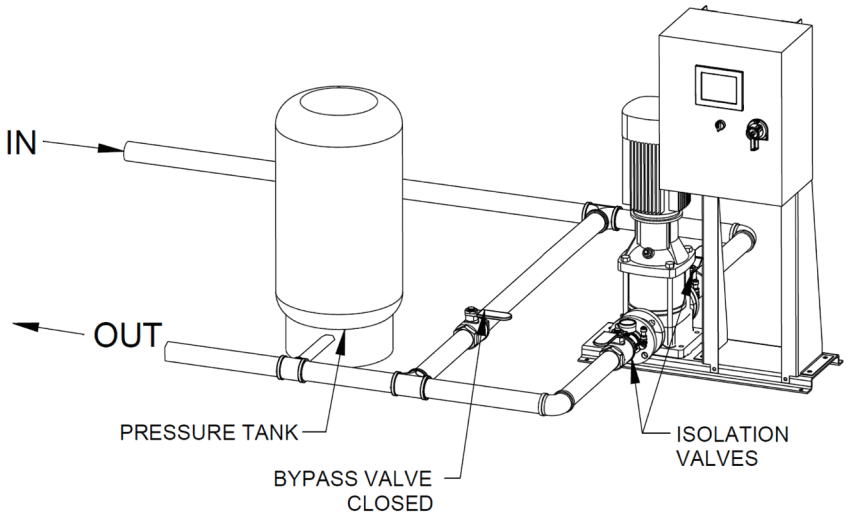

5. INSTALLATION - SUCTION LIFT

1. If the suction pipe is larger than the pump inlet, install an eccentric reducer between the suction pipe and the pump connection. Cavitation can occur if a standard reducer is used.
2. Use long sweep elbows when possible to reduce friction loss.
3. The pump must be at the highest point of the pipe work, with the suction pipe sloping upwards to the pump inlet.
4. The diameter of the suction pipe must be the same size or larger than the pump's suction port.
5. Use a foot valve in suction lift applications.
6. Size the pump for correct head.
7. Make sure the foot valve is always submerged and air can't get sucked in.
8. Install a suction gauge in the inlet pipe work and a pressure gauge in the pump discharge.

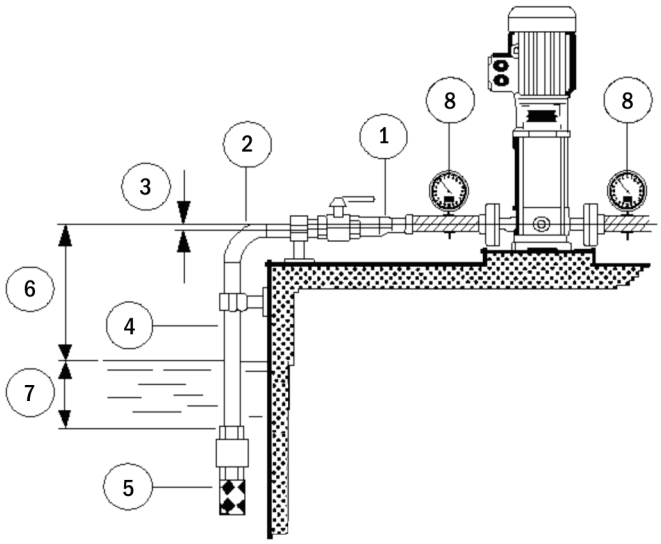

6. ELECTRICAL CONNECTION

- All electrical connection should be in accordance with the local regulations and made by a qualified electrician.
- Make sure that the supply voltages and frequencies, and phase are suitable for the motor used.
- Before proceeding, make sure that all the connections are grounded and well insulated.
- Overload protection should be provided.
- Check the direction of rotation (Three-phase motor only).
- Make sure that all controls are properly grounded.

Follow local and national plumbing, building and electrical codes when installing the pump. Maintain this pump in compliance with the National Electrical Code (NEC) or the Canadian Electrical Code (CEC) and with all local codes and ordinances that apply. Consult your local building inspector for local code information.

Use copper conductors only, and be certain wire and fuses of the correct size are installed.

DO NOT GROUND TO GAS OR FUEL LINES.

7. START-UP

The pump and suction pipe must be filled with water, before start-up, to prevent dry running.

Dry running can damage the pump bearing and shaft seal.

7.1 Priming

When connected to a pressurized system, or a holding tank with a liquid level above the pump, the pump can be easily primed by using the bleed screw (priming valve).

To fully prime the pump, turn the bleed screw counter clockwise until water streams out.
Once all the air is purged, then close the bleed screw.

If the pump is installed in a suction lift application, the suction pipes and pump must be fully filled with water.

7.2 Operation

- Start the pump and **check the direction of rotation of the motor** (Three Phase motors only).

- Start the pump, keeping the isolation valve on the discharge side of the pump partially closed. Then, open the valve slowly.
The pump must run smoothly and should not sputter. If not, then it may be necessary to re-prime the pump.

- Check the current draw of the motor. If necessary, adjust the setting of the motor overload.

- Any air pockets trapped inside the pump may be released by opening the air bleed screw.

⚠ If the pump is installed in a location where it is subject to freezing when not in operation, then the pump, transducer and the pipe system should be drained to prevent damage from freezing.

8. MAINTENANCE

⚠ Before starting maintenance work on the pump, the motor, or other parts of the system, make sure that the power supply has been switched off and locked out.

8.1 Maintenance - Mechanical Seal - Installation and Adjustment

Disassembly

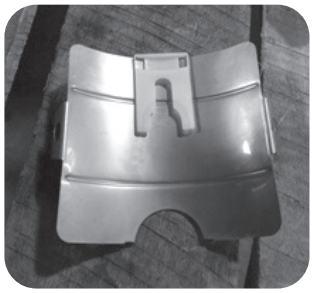

1. Remove coupling guard. There is a shaft spacer stored on the backside of one of the guards.

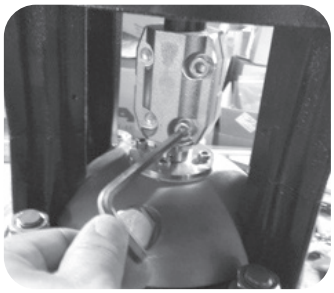

2. Remove split shaft coupling

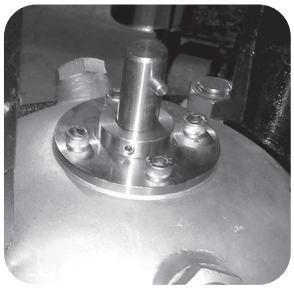

3. Loosen the three 4mm set screws from collar 1/4 turn. Do Not Back out more than 1/4 turn.

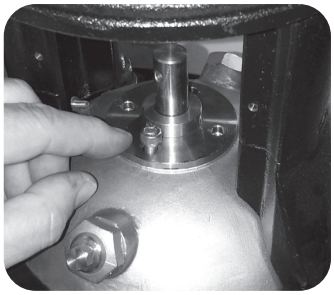

4. Remove the four 6mm socket head cap screws

5. Remove the seal assembly

Re-assembly

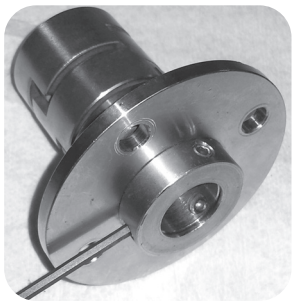

1. Make sure the three set screws are through the outer sleeve, but not protruding through the inside diameter. It must slide easily over the pump shaft.

2. Lubricate the new seal with soapy water. Slide the new seal down the pump shaft.

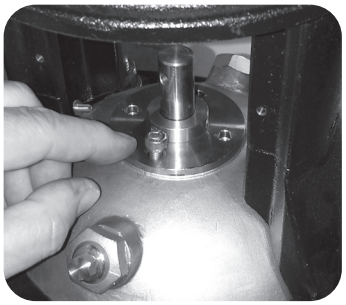

3. Install the four 6mm socket head cap screws

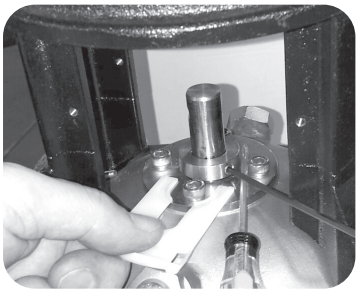

4. With a 2.5mm Allen wrench in one of the set screws, slide a screwdriver under the Allen wrench, and push down on the Allen wrench. This makes a gap under the collar. Slide the spacer in the gap under the collar. Lift the shaft up and down. When the shaft is about midway of travel, tighten all three set screws. If there is any rubbing or scraping of the impellers, repeat this step.

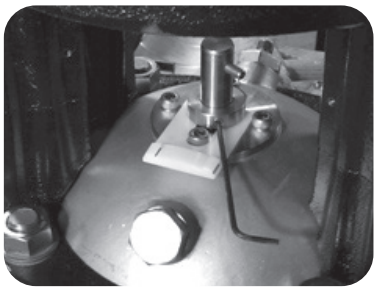
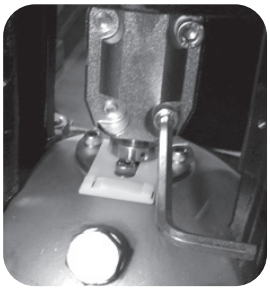

5. Install the shaft pin in the pump shaft. Re-assemble the motor split coupling then remove and store the spacer. Make sure there is an equal gap on either side of the split coupling. Torque split coupling screws to 22 ft-lb. Re-install coupling guard.

9. TROUBLESHOOTING

Fault	Probable cause	Possible Solution
Pump does not run when the motor starter is activated.	a. Power Supply failure or no power.	Check connections or restart the power supply.
	b. Motor contactor failure	Replace motor contactor
	c. Pump circuit breaker or fuses blown.	Reset breaker or replace fuse.
	d. Pump impeller may be obstructed or jammed.	Clean the obstruction and restart pump.
	e. Motor may have failed.	Replace the motor.
	f. Motor thermal overload may have tripped.	Reset thermal overload.
Overload trips immediately when the power is switched on.	a. Overload setting is too low.	Set the motor starter correctly.
	b. The cable connection is loose.	Repair or replace the cable connection.
	c. One fuse is blown.	Check all fuses, replace bad fuse and try starting again.
	d. Pump is jammed by an obstruction	Remove obstruction from system.
	e. Contacts in overload are faulty.	Replace motor starter contacts.
	f. The motor winding is defective.	Replace the motor.
	g. Low voltage.	Check the voltage.
The pump starts but, after a short time, the thermal protector trips out or the fuses blow.	a. The voltage is not within the motor's operating range.	Check the incoming voltage and the operating conditions of the pump.
	b. The control panel is installed in a hot area or is exposed to direct sunlight.	Protect the control panel from heat sources and from the sun.
	c. A phase in the power supply is missing.	Check the power supply.
The pump starts up but, after a period of time, the thermal protector trips.	a. Worn motor bearings causing motor to overheat.	Replace motor or motor bearings.
	b. There are obstructions inside the pump or pumping system.	Disassemble and clean the pump and piping.
	c. High viscous liquids may cause the motor to work too hard and overload the motor, causing the motor to overheat.	Check the actual power requirements based on the characteristics of the liquid being pumped, and replace the motor accordingly.
Pump runs but no water delivered.	a. Pump is not primed with water.	Fill the pump with the water.
	b. The suction or discharge pipes are plugged up.	Clean the suction or discharge pipe.
	c. The foot or check valve is plugged up.	Replace the foot or check valve.
	d. The suction pipe leaks.	Repair the suction pipe.
	e. Air is in the suction pipe or pump.	Purge all air from system.
	f. Motor operating in wrong direction (three-phase motor).	Change the direction of rotation of the motor by swapping two motor leads on the motor.
The pump flow is not constant.	a. The pump draws in air.	Improve the suction conditions.
	b. The pump or the suction side of the piping system plugged up.	Clean the pump or suction pipe.
The pump short cycles.	a. Leakage in the foot valve, check valve or system.	Repair or replace the components.
	b. Ruptured membrane or no air pre-charge in pressure tank.	Check air pressure in tank.